# VR120 SERIES PANELS

## VR120 Series Vandal Resistant Panels with Nameplates for the “4+1” Audio/Video system




**1 button up to 9 button panels available**

The VR120 series audio/video panels are fitted with the **136** speaker has been designed for the traditional “4+1” audio/video system.

The panels are 120mm wide, manufactured from 2mm thick 316 marine grade vertically brushed stainless steel.

The **136** speaker features three call progress LEDs: speak, busy and open, also reassurance tones and acoustic signals to aid the caller in the call process.

The panels also incorporate a **130** high quality colour camera module with a wide viewing angle of 80° vertical and 170° horizontal.

The panels also incorporate transparent nameplate windows with card inserts for each of the call buttons.

### Vandal resistant panel
120mm wide, 2mm thick 316 marine grade brushed stainless steel.

### Panel protections
**IP55** ingress protection rating and **IK10** impact protection rating.

### Call status indication LEDs
DDA compliant call progress LEDs: speak (yellow), busy (red) and door open (green).

### Reassurance tones
Call progress reassurance tones and acoustic signals.

### Vandal resistant call buttons
**IP68** rated **VXSSB** call buttons with high contrast yellow bezel button upgrade option: **VXSSB/Y/UPGRADE**.

### Mic volume & speaker level volume controls
Adjustable mic and speaker volume controls.

### Lock release relay
Volt free relay contacts (**C**/**NO**/**NC**) for door lock or gate controls.

### Hi-Res colour camera
High quality CMOS camera with 6 bright white light illumination LEDs.

### Coax or balanced video signal
Configure the camera for coax video or balanced (non-coax) video.

### Nameplate windows
Clear polycarbonate nameplate windows per call button.

DDA COMPLIANT

IP 55 INGRESS PROTECTION

IK 10 IMPACT PROTECTION

VIDEX®

## VR120 Series Audio/Video Panels with Nameplate Windows

| | VR120/136-1/V/NP | VR120/136-2/V/NP | VR120/136-3/V/NP |
|---|---|---|---|
| |  |  |  |
| **No. of call buttons** | 1x **VXSSB** | 2x **VXSSB** | 3x **VXSSB** |
| **Yellow bezel button** | 1x **VXSSB/Y/UPGRADE** | 2x **VXSSB/Y/UPGRADE** | 3x **VXSSB/Y/UPGRADE** |

| | |
|---|---|
| **Description** | VR120 series vandal resistant traditional “4+1” audio/video panels with nameplate windows (including flush back box). |
| **Finish and materials** | 2mm thick 316 marine grade vertically brushed stainless steel. |
| **Speaker module** | **136** traditional “4+1” audio speaker module with reassurance tones and acoustic signals. |
| **Working voltage**<br>**Current rating**<br>**LEDs**<br>**Lock release**<br>**Push to Exit** | 12Vdc power input **+/-** 10% (compatible with **520M** and **521B** power supplies).<br>Standby: 25mA, during call: 150mA (max.), during a conversation: 70mA.<br>3x DDA compliant call prgress LEDs: yellow (speak), red (busy) and green (door open).<br>Lock relay: dry contact relay (C/NC/NO) (max. 24Vac/dc @ 3A).<br>1x PTE push to exit input (switched 0V). |
| **Camera module** | **130** high quality CMOS colour camera with 6 bright white illumination LEDs. |
| **Working voltage**<br>**Current rating**<br>**Viewing angle**<br>**Video signal** | 12Vdc **or** 20Vdc power input (compatible with the **521B**, **893N** and **HDR-30-15** PSUs).<br>During operation: 100mA (max.).<br>Wide viewing angle: 80° vertical and 170° horizontal.<br>Balanced video signal (V1/V2) **or** coax video signal (V/M). |
| **Nameplate windows** | Transparent polycarbonate nameplate windows with **12x40mm** card inserts. |
| **Panel size (mm)** | Panel dimensions for 1 button panel: **120 (W) x 280 (L) x 38 (D).**<br>Panel dimensions for 2-5 button panels: **120 (W) x 400 (L) x 38 (D).** |
| **Flush box size (mm)** | **VRFB120x280** (to fit 1 button size panel) : **100 (W) x 260 (L) x 50 (D).**<br>**VRFB120x400** (to fit 2-5 button size panels) : **100 (W) x 380 (L) x 50 (D).** |
| **Other back box options** | Surface with rainshield surround **or** flush with bezel surround. |
| **Surface box size (mm)** | **1.2mm** thick, 316 grade vertically brushed stainless steel rainshield surround.<br>**VRSB120x280** (to fit 1 button size panel) : **124 (W) x 284 (L) x 80 (D).**<br>**VRSB120x400** (to fit 2-5 button size panels) : **124 (W) x 404 (L) x 80 (D).** |
| **Bezel box size (mm)** | **1.2mm** thick, 316 grade vertically brushed stainless steel with **18mm** bezel surround.<br>**VRBB120x280** (to fit 1 button size panel) : **157 (W) x 317 (L) x 60 (D).**<br>**VRBB120x400** (to fit 2-5 button size panels) : **157 (W) x 437 (L) x 60 (D).** |



**VRSB120x280** **VRSB120x400** **VRSB120x500**



**VRBB120x280** **VRBB120x400** **VRBB120x500**

**VXSSB/Y/UPGRADE yellow bezel button option**

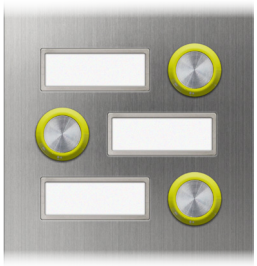

| | VR120/136-4/V/NP | VR120/136-5/V/NP | VR120/136-6/V/NP |
|---|---|---|---|
| |  |  |  |
| **No. of call buttons** | 4x **VXSSB** | 5x **VXSSB** | 6x **VXSSB** |
| **Yellow bezel button** | 4x **VXSSB/Y/UPGRADE** | 5x **VXSSB/Y/UPGRADE** | 6x **VXSSB/Y/UPGRADE** |

**Camera viewing angle: 80° vertical and 170° horizontal**

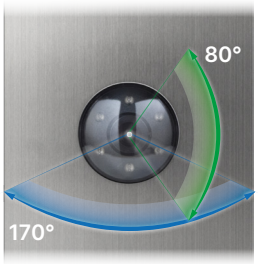


| | VR120/136-7/V/NP | VR120/136-8/V/NP | VR120/136-9/V/NP |
|---|---|---|---|
| |  |  |  |
| **No. of call buttons** | 7x **VXSSB** | 8x **VXSSB** | 9x **VXSSB** |
| **Yellow bezel button** | 7x **VXSSB/Y/UPGRADE** | 8x **VXSSB/Y/UPGRADE** | 9x **VXSSB/Y/UPGRADE** |

| | |
|---|---|
| **Description** | VR120 series vandal resistant traditional “4+1” audio/video panels with nameplate windows (including flush back box). |
| **Finish and materials** | 2mm thick 316 marine grade vertically brushed stainless steel. |
| **Speaker module** | **136** traditional “4+1” audio speaker module with reassurance tones and acoustic signals. |
| **Working voltage** | 12Vdc power input **+/-** 10% (compatible with **520M** and **521B** power supplies). |
| **Current rating** | Standby: 25mA, during call: 150mA (max.), during a conversation: 70mA. |
| **LEDs** | 3x DDA compliant call prgress LEDs: yellow (speak), red (busy) and green (door open). |
| **Lock release** | Lock relay: dry contact relay (C/NC/NO) (max. 24Vac/dc @ 3A). |
| **Push to Exit** | 1x PTE push to exit input (switched 0V). |
| **Camera module** | **130** high quality CMOS colour camera with 6 bright white illumination LEDs. |
| **Working voltage** | 12Vdc **or** 20Vdc power input (compatible with the **521B**, **893N** and **HDR-30-15** PSUs). |
| **Current rating** | During operation: 100mA (max.). |
| **Viewing angle** | Wide viewing angle: 80° vertical and 170° horizontal. |
| **Video signal** | Balanced video signal (V1/V2) **or** coax video signal (V/M). |
| **Nameplate windows** | Transparent polycarbonate nameplate windows with **12x40mm** card inserts. |
| **Panel size (mm)** | Panel dimensions for 2-5 button panels: **120 (W) x 400 (L) x 38 (D).**<br>Panel dimensions for 6-9 button panels: **120 (W) x 500 (L) x 38 (D).** |
| **Flush box size (mm)** | **VRFB120x400** (to fit 2-5 button size panels) : **100 (W) x 380 (L) x 50 (D).**<br>**VRFB120x500** (to fit 6-9 button size panels) : **100 (W) x 480 (L) x 50 (D).** |
| **Other back box options** | Surface with rainshield surround **or** flush with bezel surround. |
| **Surface box size (mm)** | **1.2mm** thick, 316 grade vertically brushed stainless steel rainshield surround.<br>**VRSB120x400** (to fit 2-5 button size panels) : **124 (W) x 404 (L) x 80 (D).**<br>**VRSB120x500** (to fit 6-9 button size panels) : **124 (W) x 504 (L) x 80 (D).** |
| **Bezel box size (mm)** | **1.2mm** thick, 316 grade vertically brushed stainless steel with **18mm** bezel surround.<br>**VRBB120x400** (to fit 2-5 button size panels) : **157 (W) x 437 (L) x 60 (D).**<br>**VRBB120x500** (to fit 6-9 button size panels) : **157 (W) x 537 (L) x 60 (D).** |




**VR120/136-1/V/NP**



**VRFB120x280** **VRFB120x400** **VRFB120x500**

(measurements in mm)

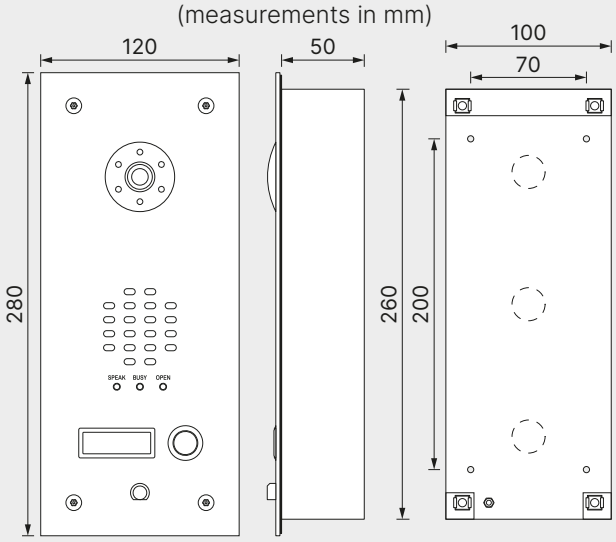


1 button panel + **VRFB120x280** flush box

(measurements in mm)

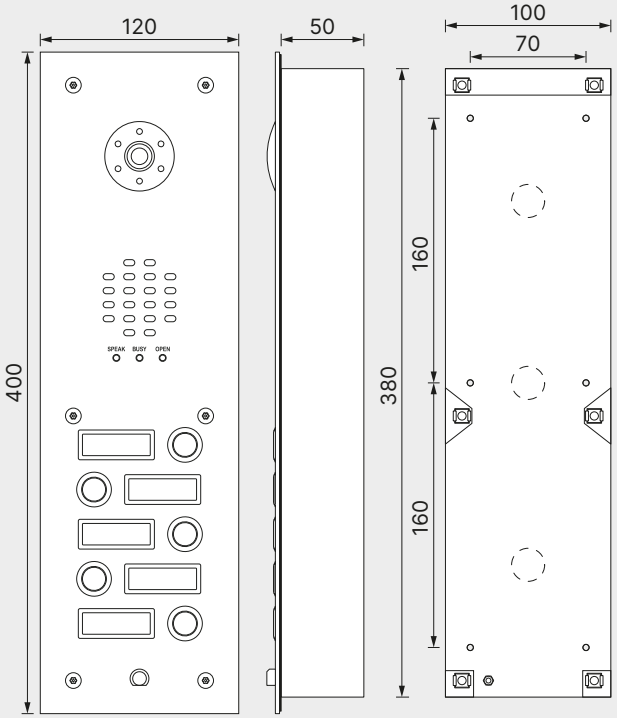


2 - 5 button panels + **VRFB120x400** flush box

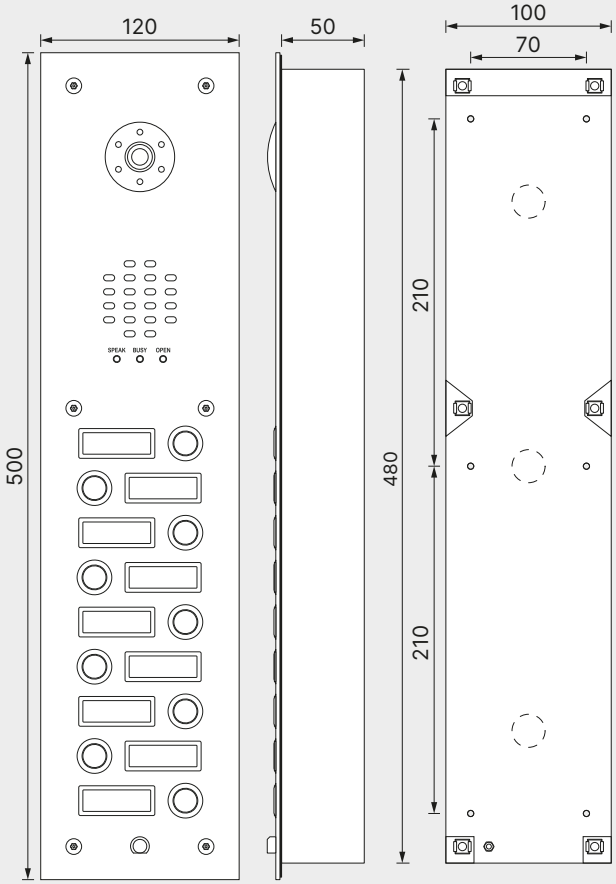


6 - 9 button panels + **VRFB120x500** flush box

## Part Codes

| Part No. | Description |
|---|---|
| **VR120/136-1/V/NP** | VR120 series 1 way “4+1” audio/video panel with nameplate (inc. flush box). |
| **VR120/136-2/V/NP** | VR120 series 2 way “4+1” audio/video panel with nameplates (inc. flush box). |
| **VR120/136-3/V/NP** | VR120 series 3 way “4+1” audio/video panel with nameplates (inc. flush box). |
| **VR120/136-4/V/NP** | VR120 series 4 way “4+1” audio/video panel with nameplates (inc. flush box). |
| **VR120/136-5/V/NP** | VR120 series 5 way “4+1” audio/video panel with nameplates (inc. flush box). |
| **VR120/136-6/V/NP** | VR120 series 6 way “4+1” audio/video panel with nameplates (inc. flush box). |
| **VR120/136-7/V/NP** | VR120 series 7 way “4+1” audio/video panel with nameplates (inc. flush box). |
| **VR120/136-8/V/NP** | VR120 series 8 way “4+1” audio/video panel with nameplates (inc. flush box). |
| **VR120/136-9/V/NP** | VR120 series 9 way “4+1” audio/video panel with nameplates (inc. flush box). |
| **VXSSB/Y/UPGRADE** | Upgrade call button to VXSSB/Y button with yellow bezel. |
| **VRFB120x280** | Flush back box for VR120 series panels to fit 120x280 size panel. |
| **VRFB120x400** | Flush back box for VR120 series panels to fit 120x400 size panel. |
| **VRFB120x500** | Flush back box for VR120 series panels to fit 120x500 size panel. |
| **VRSB120x280** | Surface back box for VR120 series panels to fit 120x280 size panel. |
| **VRSB120x400** | Surface back box for VR120 series panels to fit 120x400 size panel. |
| **VRSB120x500** | Surface back box for VR120 series panels to fit 120x500 size panel. |
| **VRBB120x280** | Flush bezel back box for VR120 series panels to fit 120x280 size panel. |
| **VRBB120x400** | Flush bezel back box for VR120 series panels to fit 120x400 size panel. |
| **VRBB120x500** | Flush bezel back box for VR120 series panels to fit 120x500 size panel. |

VIDEX U.K. Ltd

**Main Office**
Unit 4-7 Chillingham Ind. Estate, Chapman Street,
Newcastle Upon Tyne, NE6 2XX
**tel: 0370 300 1240**
**sales@videxuk.com** **www.videxuk.com**



Although every effort has been made to provide accurate information, there may be technical or print errors in this data sheet. Videx reserves the right to make changes, corrections and improvements to such information at any time and without prior notice.