8901

8000 SERIES

Vandal Resistant 8000 Series Standalone 3 code, 3 relay Codelock with Blue back-lit keypad buttons



8901/F (flush)

8901/S (surface)



Vandal Resistant 8000 series standalone, self-contained codelock module

The **8901** codelock module features 12 stainless steel keypad buttons: **1 - 9**, ↵ [**ENTER**], **0** and **×** [**CLEAR**] which are all back-lit blue, but can also be adjusted to illuminate with low intensity, bright or can be disabled if required.

They include 2 status LEDs: green for accept/access granted and red for access denied or programming mode, providing the user with clear indication of when the keypad is in operation or in programming mode.

Vandal Resistant front fascia

316 grade vertically brushed stainless steel front fascia.

Module protections

IK09 impact protection and **IP55** ingress protection ratings.

Back-lit keypad buttons

DDA compliant blue back-lit keypad buttons to assist the partially sighted.

3 volt free relays & 3 codes

3 volt free relays with 1 programmable access code per relay (3 codes total).

Adjustable relay times

Programmable relay times 1 - 99 seconds or 00 for latching 'toggle' mode.

Push to exit inputs

PTE inputs (switched 0V) for relay RLY1 and relay RLY2 only.

Back EMF protection

Each relay with back EMF protection.

Surface or Flush

Surface or flush options available.

CODELOCK | BACK LIGHT | IK09 | IP55

VIDEX®

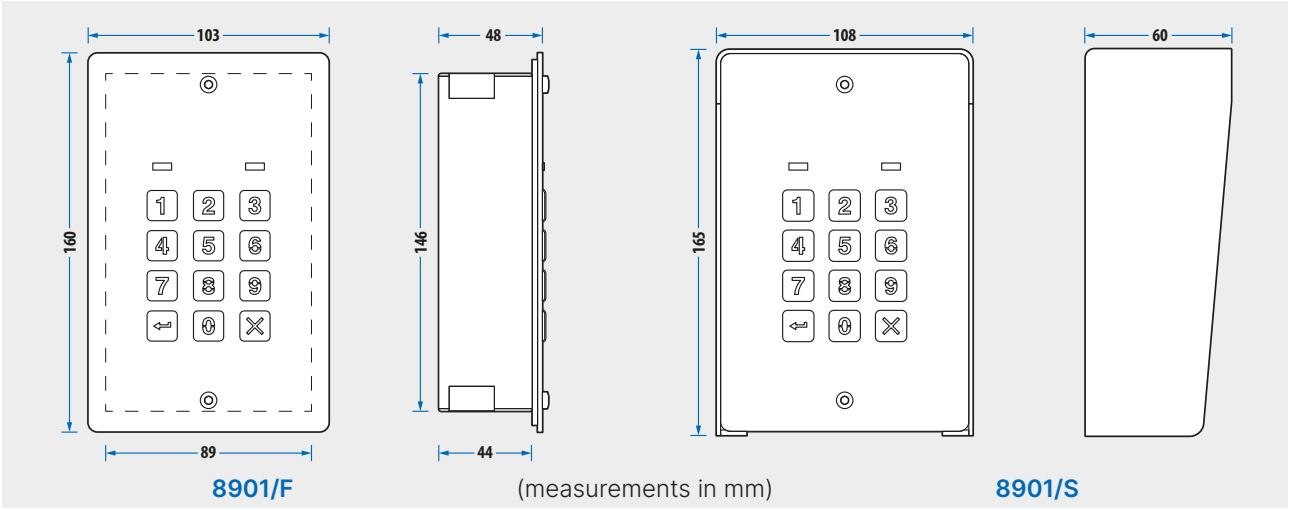

8901 series codelock module key features

- Standalone, self-contained codelock module with surface or flush options available.
- DDA compliant blue back-lit keypad buttons to assist the partially sighted.
- 3 code, 3 relay standalone keypad (1 code per relay) with 4 - 8 digit code length.
- Impact protection rating **IK09** and ingress protection rating **IP55**.
- Power input 12Vac/dc or 24Vac/dc.

Technical characteristics

	8901/F - 8901/S
Description	Vandal Resistant 8000 series standalone, self-contained 3 code, 3 relay codelock module with blue back-lit keypad buttons.
Materials	12 gauge (2.5mm thick) 316 marine grade vertically brushed stainless steel.
Module protection	**IK09** impact protection and **IP55** ingress protection ratings.
Buttons	12 stainless steel keypad buttons: **1 - 9**, ↵ [**ENTER**], **0** and **×**[**CLEAR**] all back-lit blue.
Back light illumination adjustment	Yes: back light jumper **JPL** for controlling back-lit buttons brightness. 2x **JPL** programming modes: **mode 1, JPL = A position**, low brightness in standby then full brightness when any button pressed; **mode 1, JPL = B position**, back light **OFF** in standby then full brightness when any button pressed; **mode 2, A or B position**, full brightness all the time. Jumper **JPL** removed = back light disabled.
Status LEDs	Yes: **green LED** = accept/relay activated, **red LED** = programming mode/access denied.
Programming	Programming carried out directly via the keypad.
No. of relays, relay voltage and current	3 relays: **RLY1** = C1/NO1/NC1, **RLY2** = C2/NO2/NC2 and **RLY3** = C3/NO3/NC3. Each relay 24Vac/dc at 3A.
Codes & code length	3 codes, 1 code per relay. Each code between 4 - 8 digits in length.
Back EMF protection	Yes: Selectable MOV jumpers to enable/disable back EMF protection, one for each relay.
Relay times	Relay times **1 - 99** seconds **or** **00** for latching 'toggle' mode.
PTE inputs	Yes: 2x switched 0V inputs (push-to-make), **SW1 (RLY1)** and **SW2 (RLY2)** only.
Module Size (mm)	Flush: front fascia = 103 (W) x 160 (L), flush box = 89 (W) x 146 (L) x 44 (D). Surface (with rainshield surround): 108 (W) x 165 (L) x 60 (D) mm.
Working voltage	12Vac/dc **or** 24Vac/dc power input.
Current rating	Standby: 20mA (standby), 70mA (max.).
Working temperature	-20°/+60°C.

VIDEX U.K. Ltd

Main Office
Unit 4-7 Chillingham Ind. Estate, Chapman Street,
Newcastle Upon Tyne, NE6 2XX
tel: 0370 300 1240
sales@videxuk.com **www.videxuk.com**

DS-8901-ENUK-V2-0-05/10/26

Although every effort has been made to provide accurate information, there may be technical or print errors in this data sheet. Videx reserves the right to make changes, corrections and improvements to such information at any time and without prior notice.